71990-00001.A

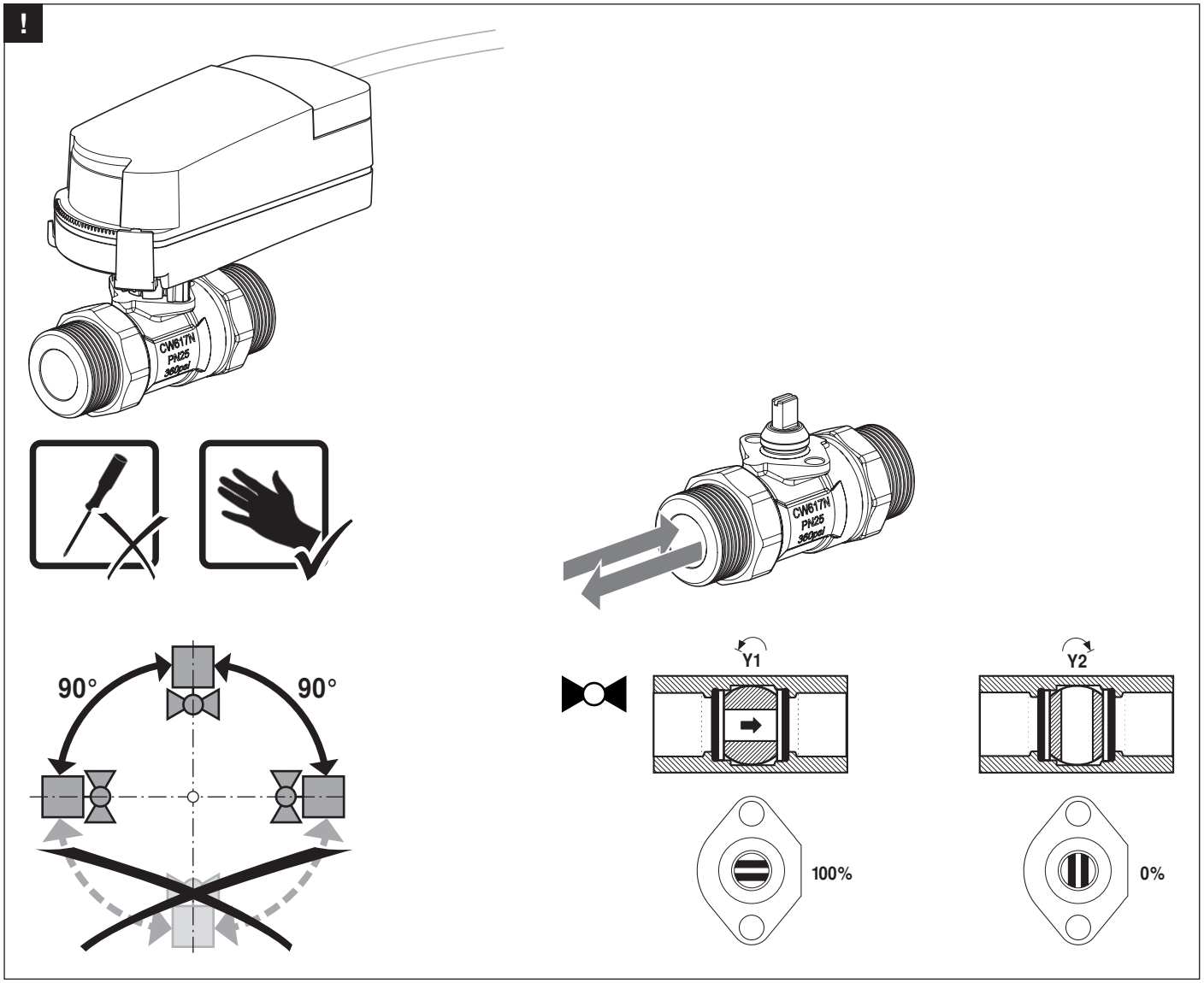

www.belimo.eu/safety

1

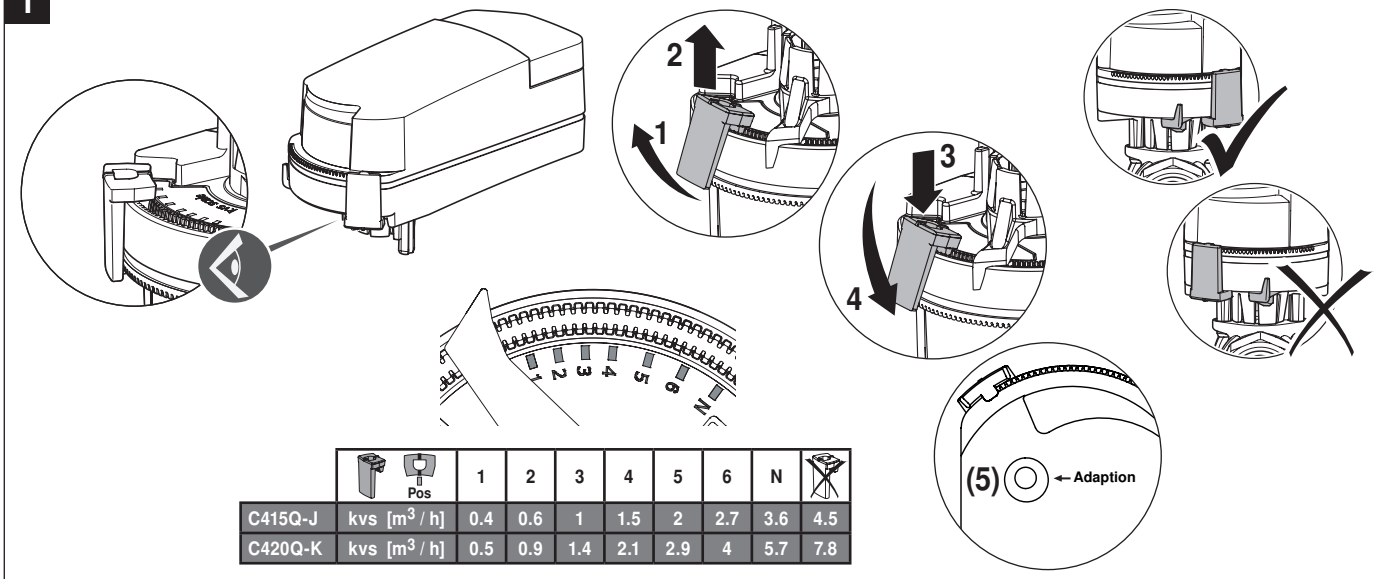

	Pos	1	2	3	4	5	6	N	
C415Q-J	kvs [m³ / h]	0.4	0.6	1	1.5	2	2.7	3.6	4.5
C420Q-K	kvs [m³ / h]	0.5	0.9	1.4	2.1	2.9	4	5.7	7.8

2

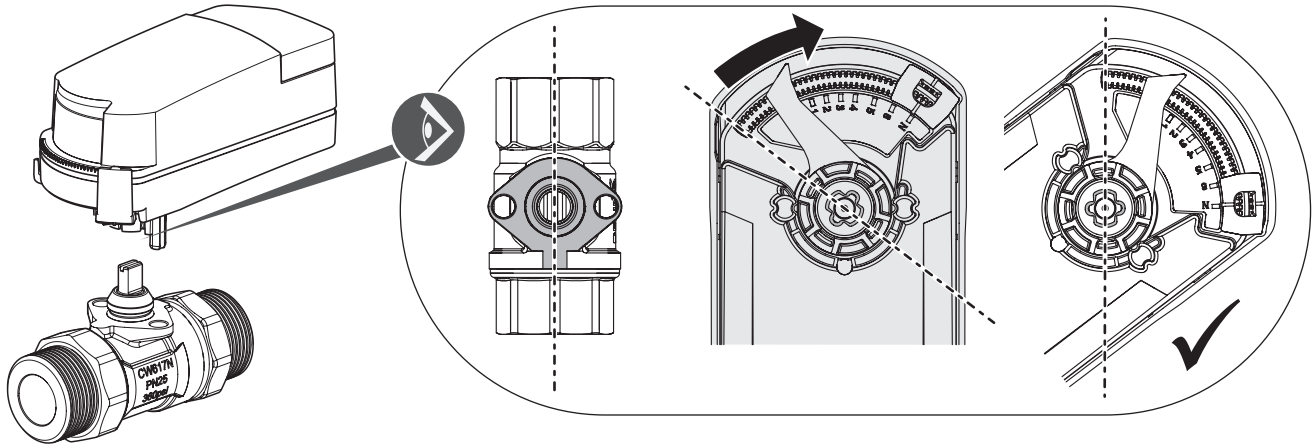
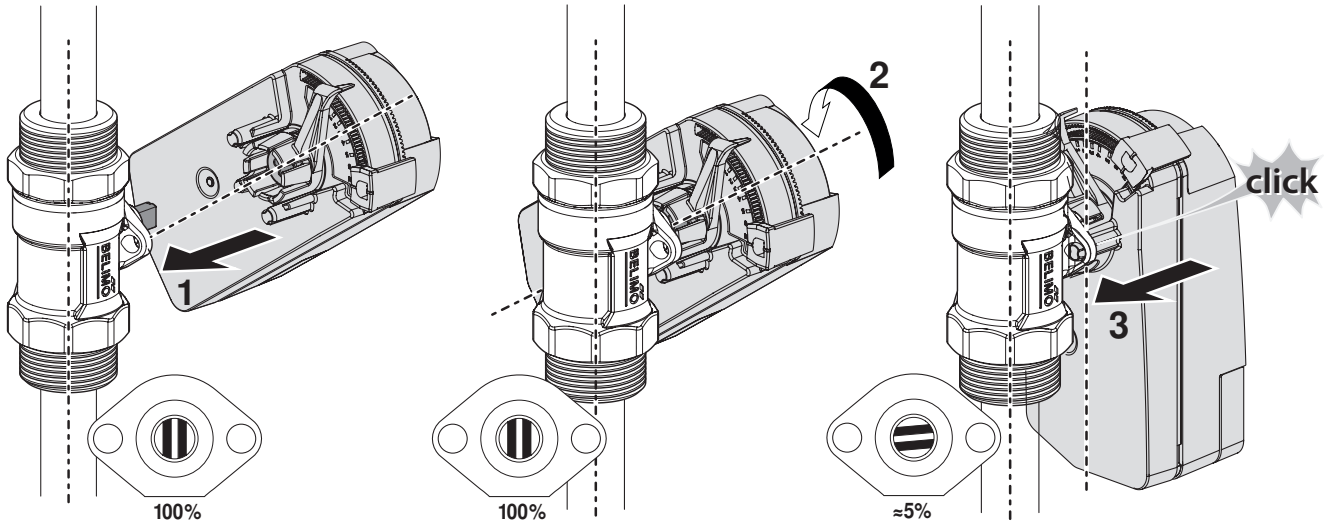
3