71415-00001.G

1

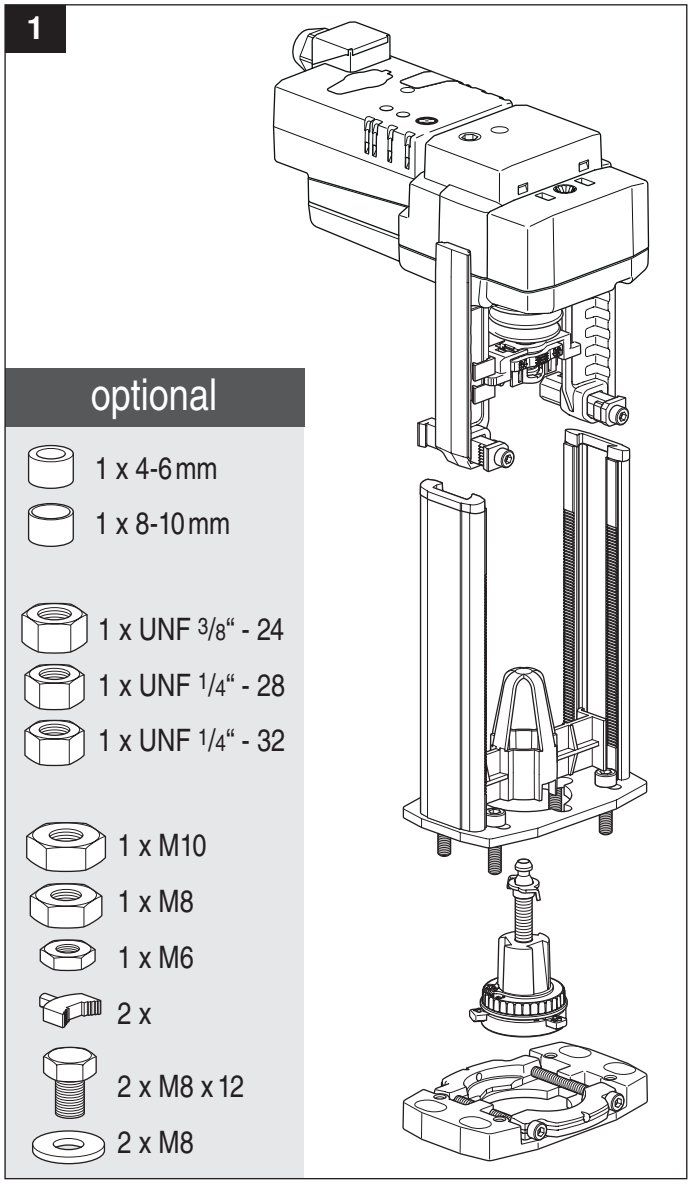

2

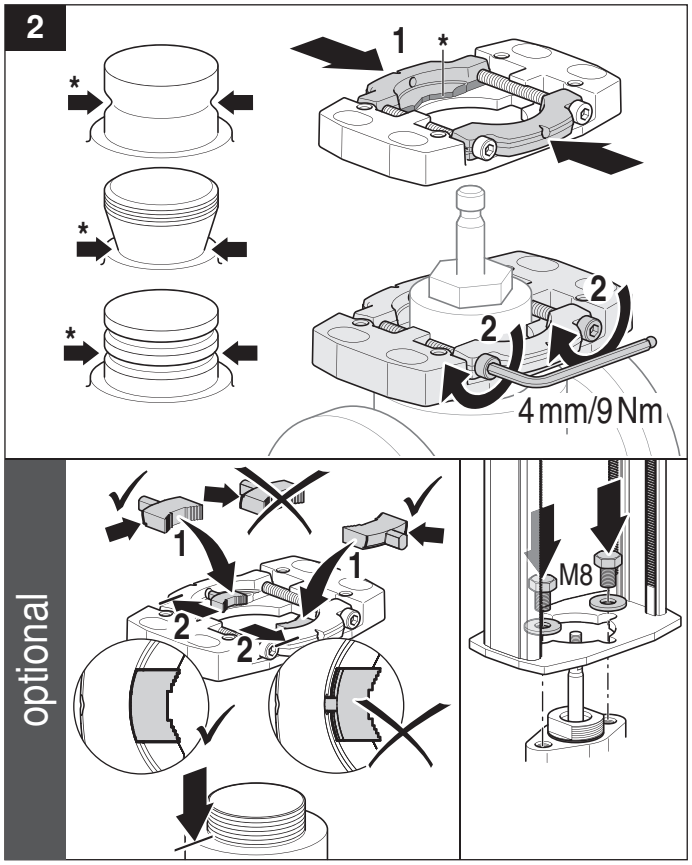

EXTRA	LDM	RV 102 E RV 103 E	ZNV-203
	Sauter	VUG / BUG VQD / BQD VQE / BQE	ZNV-204

3

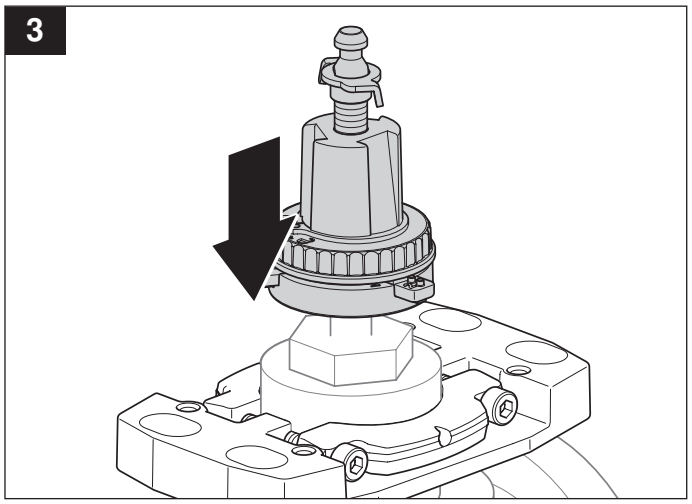

4

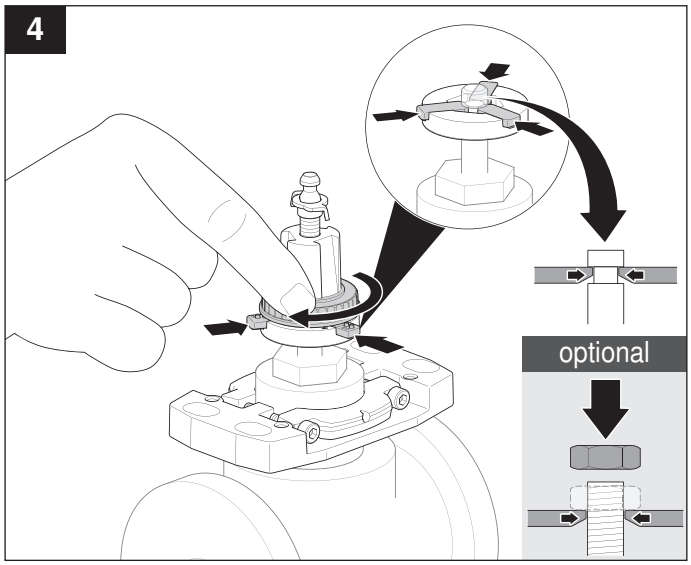

5

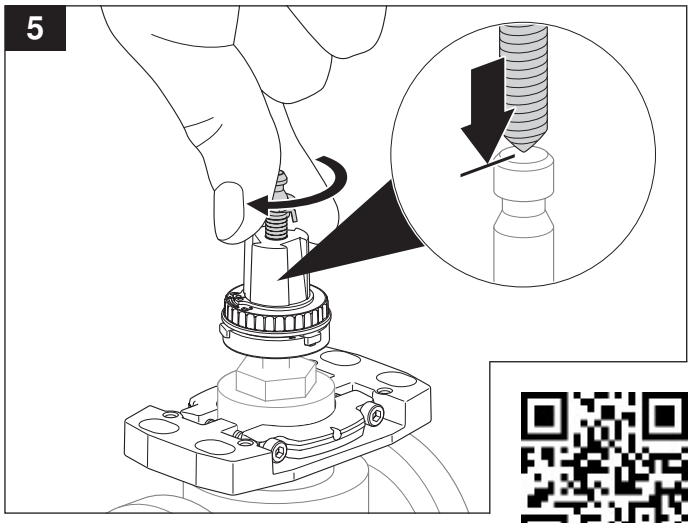

www.belimo.eu/safety

6

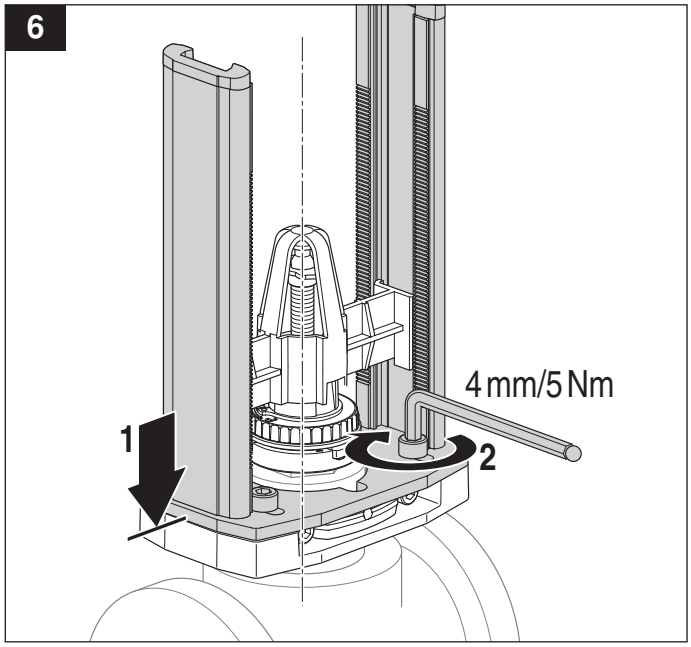

7

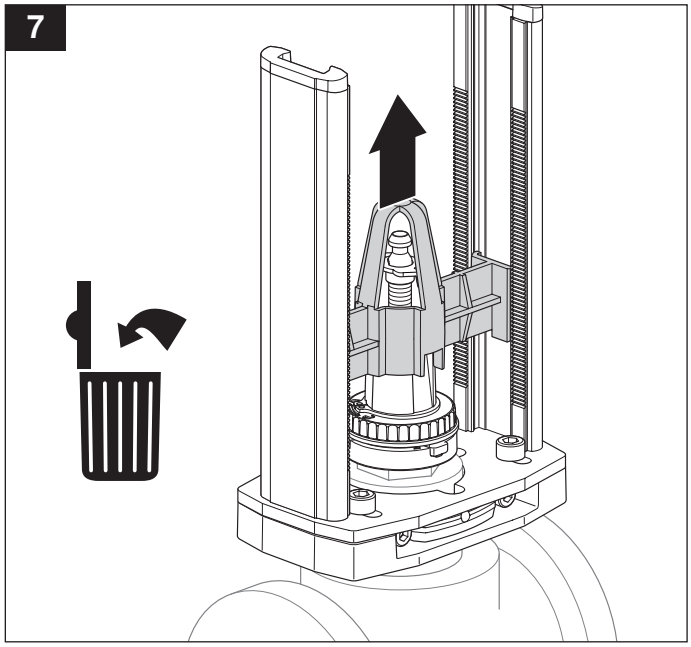

8

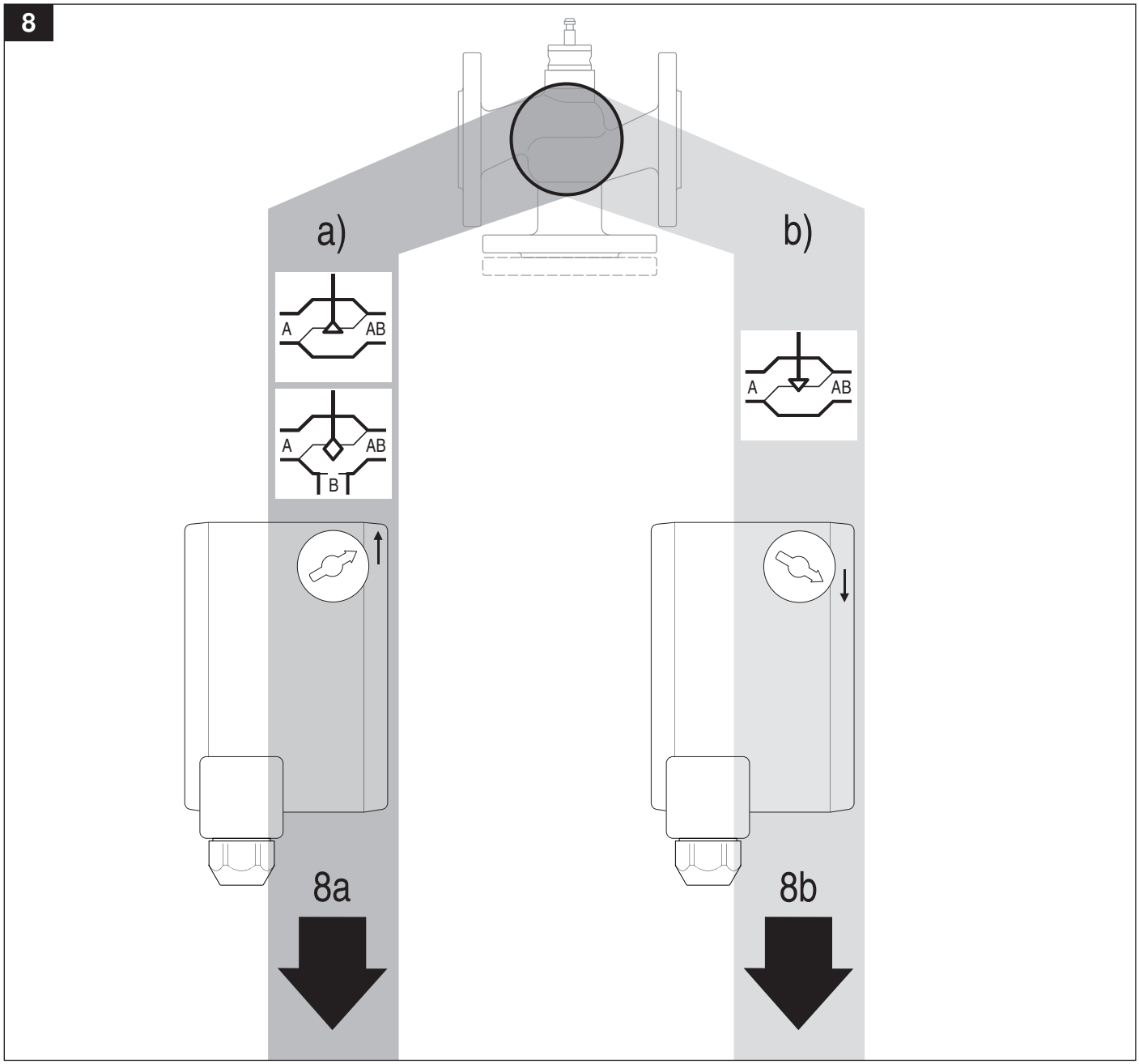

8a

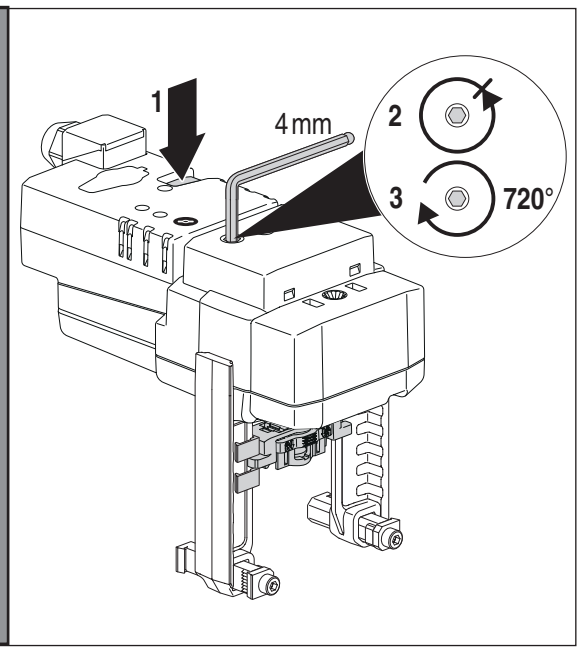

8b

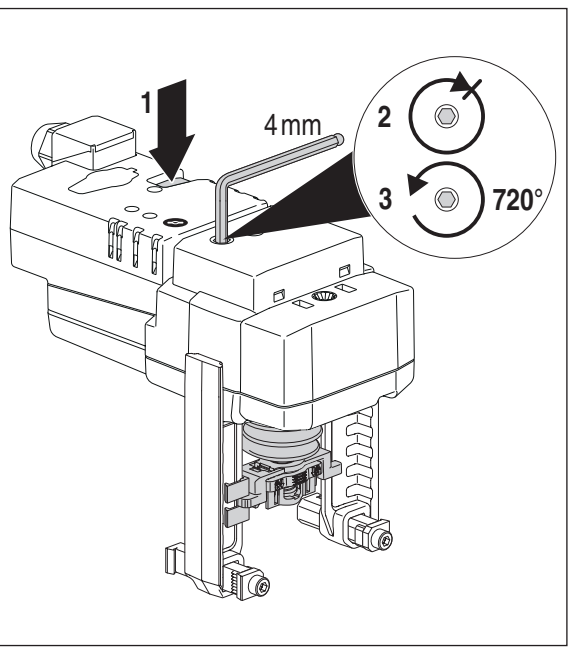

9a

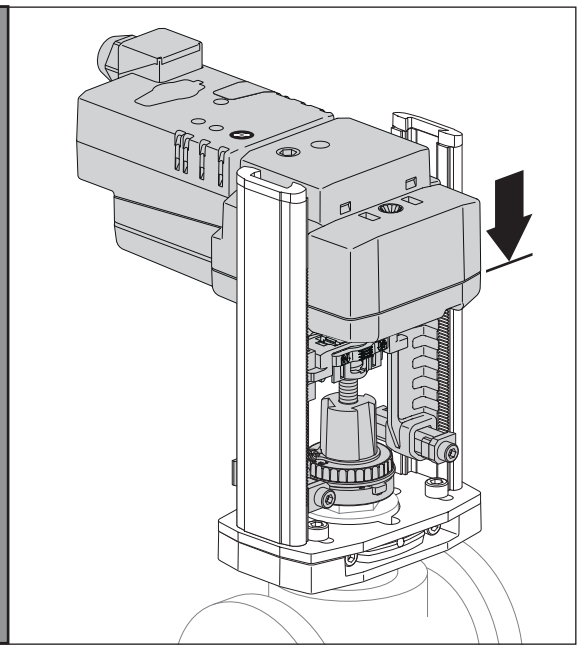

9b

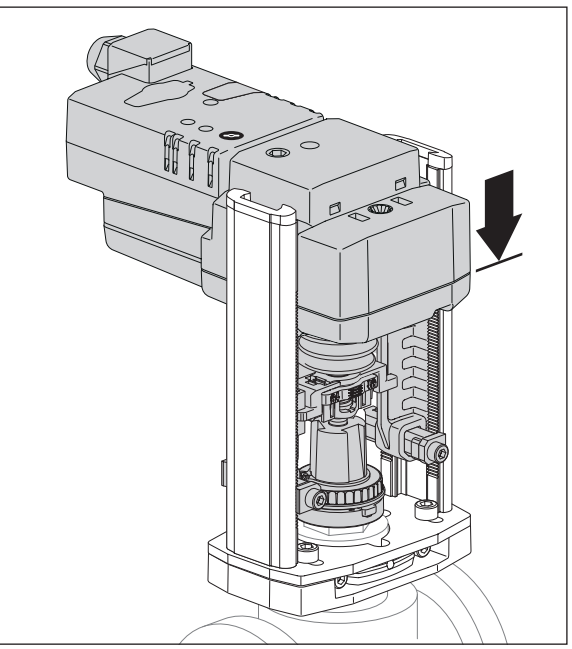

10a

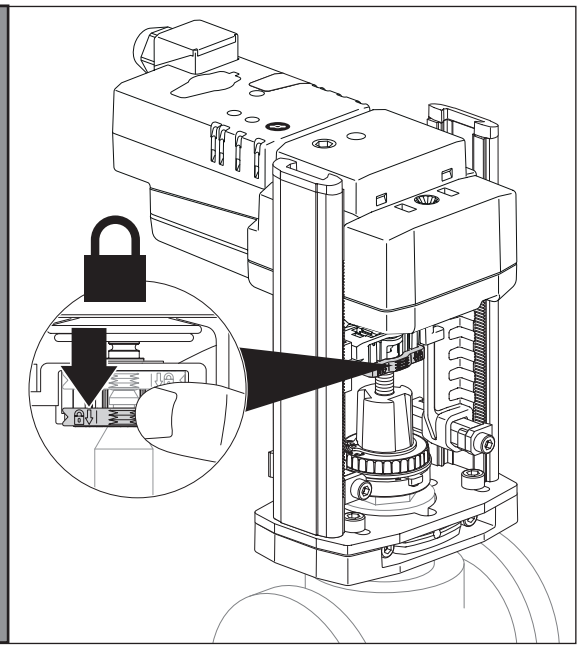

10b

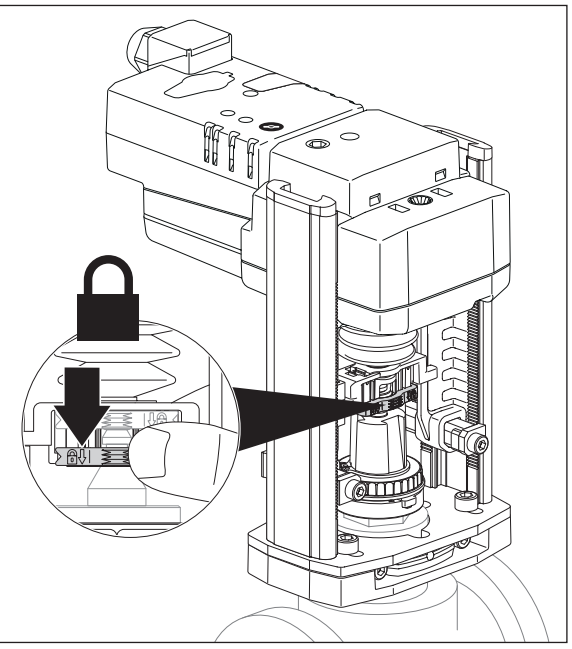

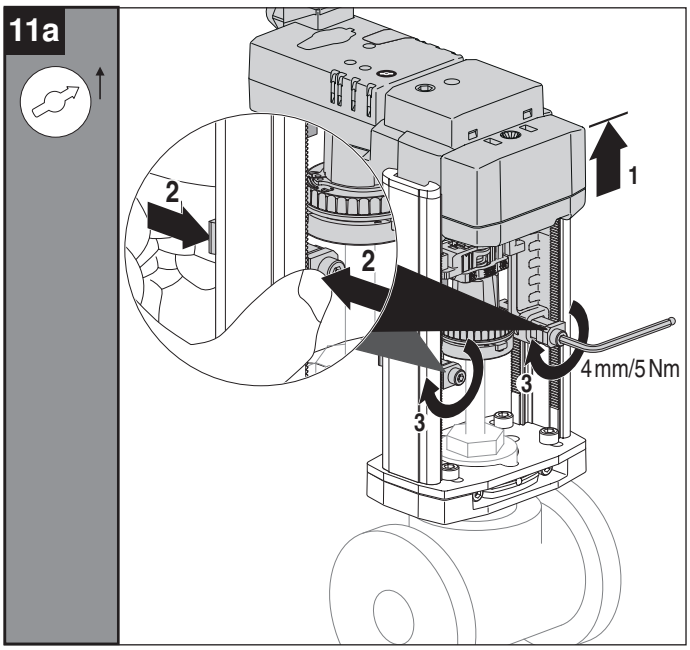
11a
1
2
2
3
3
4 mm/5 Nm

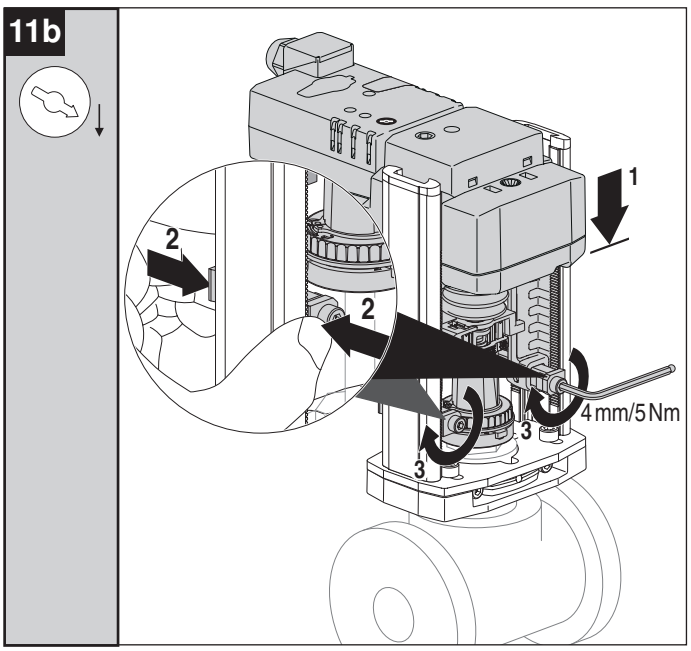
11b
1
2
2
3
3
4 mm/5 Nm

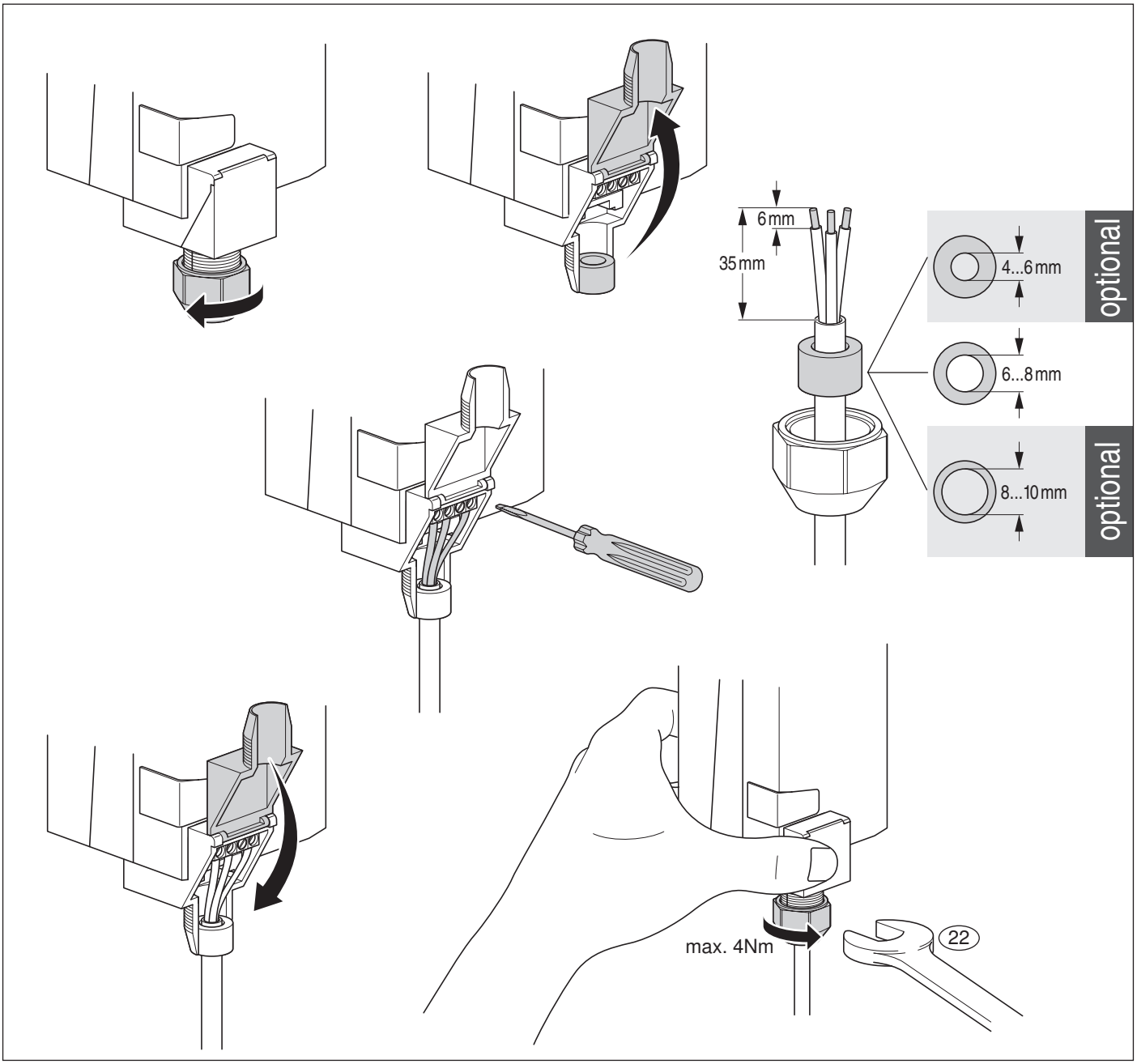
6 mm
35 mm
4...6 mm
6...8 mm
8...10 mm
optional
optional
max. 4Nm
22

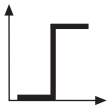

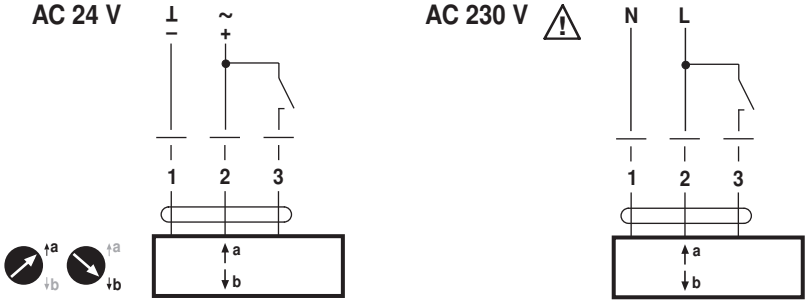

..V(C)24A-RE

..V(C)230A-RE

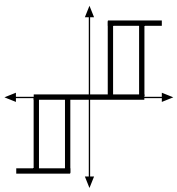

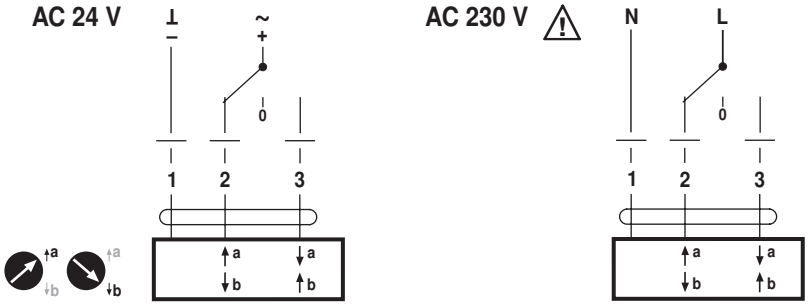

..V(C)24A-RE

..V(C)230A-RE

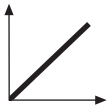

AC 24 V / DC 24 V

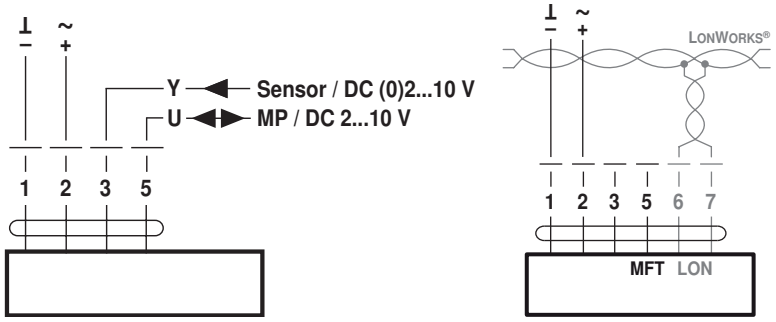

..V(C)24A-MP-RE

..V24ALON

BACnet MS/TP / Modbus RTU

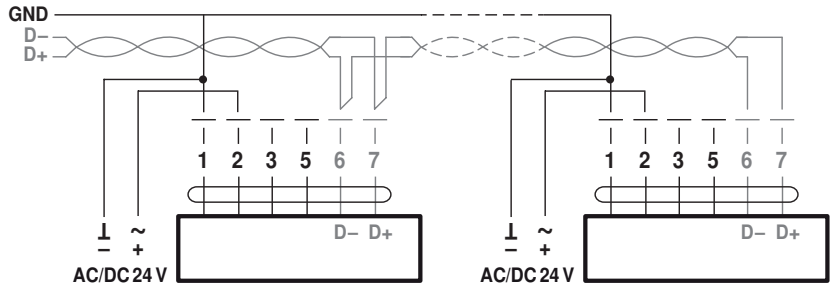

..V24A-MOD

..V24A-MOD

BACnet MS/TP / Modbus RTU

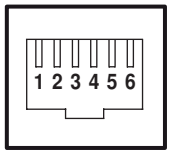

1 AC/DC 24 V
2 GND
3 D– (A)
4 D+ (B)
5 AC/DC 24 V
6 GND

..V24A-MOD-J6

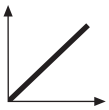

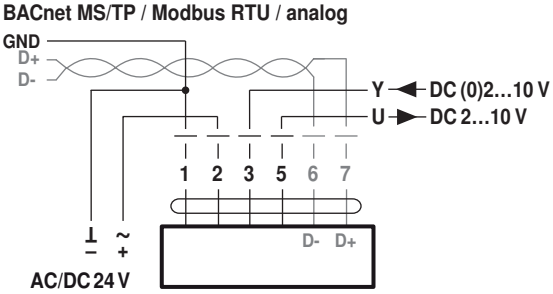

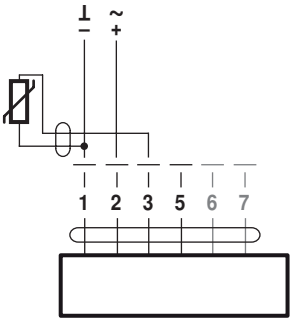
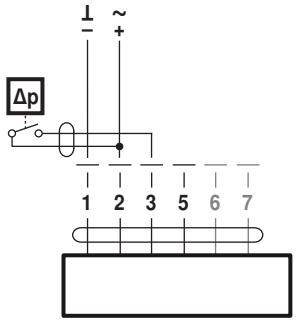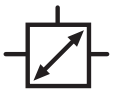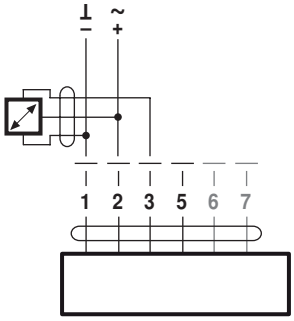
Ni1000	–28...+98 °C	850...1600 Ω [2]
PT1000	–35...+155 °C	850...1600 Ω [2]
NTC	–10...+160 °C [1]	200 Ω...60 kΩ [2]