BELIMO Automation Ltd
Brunnenbachstrasse 1
8340 Hinwil
SWITZERLAND

71372-00001.F

!

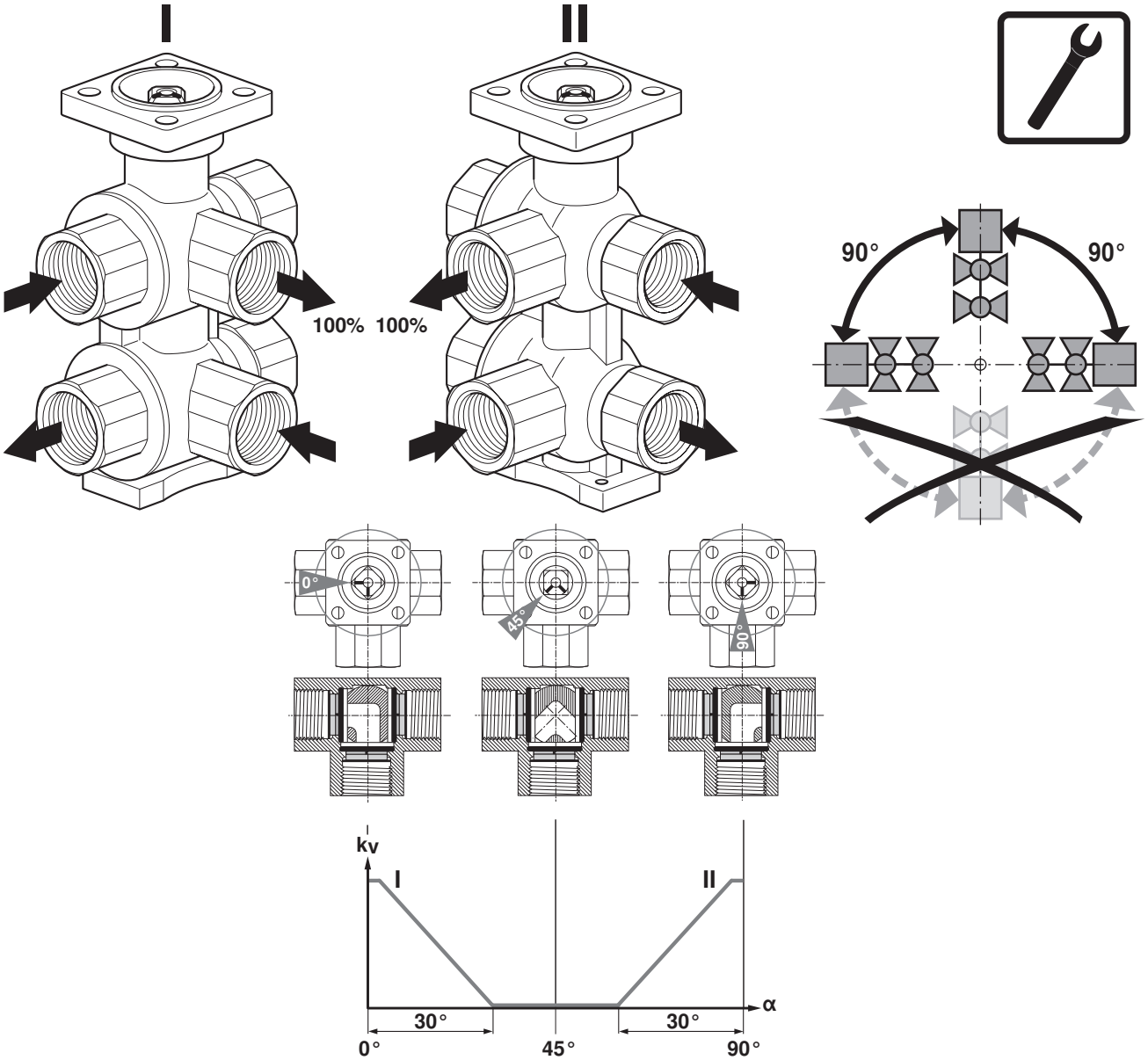

i

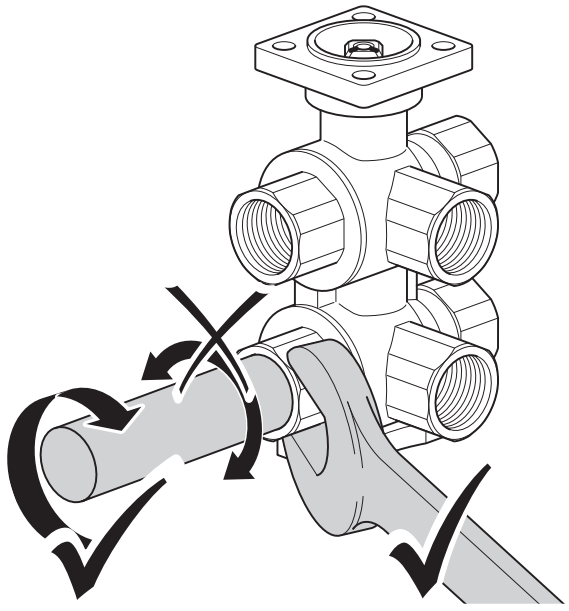

www.belimo.com/safety